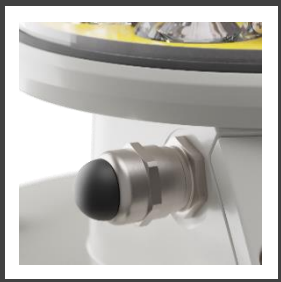

DATASHEET

ORIGINALNAi LED-160-NAI

- **For use as a 5 nautical mile beacon on offshore wind turbine**
- **Maintenance-free LED technology**
- **Standard NAi bus interface for power supply and communicatio**
- **Suitable for series connection of multiple NAi component**

This nautical lantern is intended for use on offshore wind turbines. It satisfies the requirements of the IALA recommendation O-139[1] and the guideline ‘offshore structures’ of the WSV[2] according to the ‘Technical Requirements’ TF01 ‘5 nautical mile beacon (yellow)’.

The device is distinguished by low power consumption, a long service life and robust construction. Equipped with light emitting diodes (LEDs) as light sources the optical systems is designed for long maintenance intervals. Utilising LED technology provides the greatest possible light output.

The lantern's integrated NAi bus interface is used to supply power, to control the flashcode and intensity, and to transmit status and error messages to the central NAi controller, so that they are available to the central SCADA system.

Using the integrated daylight sensor, an autonomous fallback solution is possible so that in the case of interrupted bus communication, the light is switched on when the environmental brightness falls below a minimum brightness level (configurable).

[1] IALA Recommendations O-139, “The marking of man-made offshore structures”
[2] Wasser-und Schifffahrtsverwaltung des Bundes

Dimensions & Weight

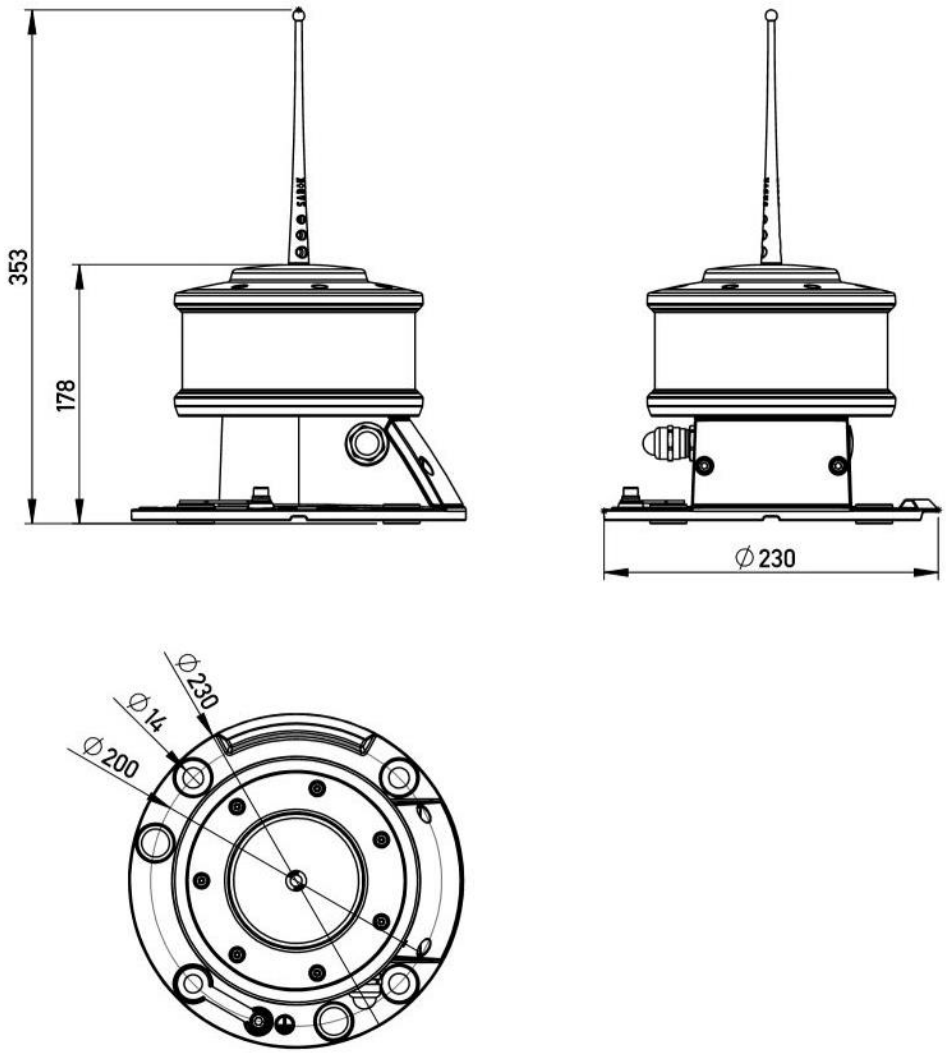

Diameter optics	160 mm
Diameter mounting foot	230 mm
Height without bird spikes	178 mm
Weight incl. mounting foot	2.55 kg

Material

Housing (Device foot, head, cover for socket)	Anodised, powder-coated aluminium (AlSi12)
Lens	PMMA
Lens cover	PMMA
Cable gland	Nickel-plated brass
Earthing connection	Nickel-plated brass
Cover indicator LED	PMMA
Insulation sleeve	PA
Seals	TPE, injection-molded
Pressure compensation valve for socket and housing	PTFE membrane

Optical System

Light colour	Yellow
Maximum light intensity (along the optical axis	approx. 140 cd
Beam angle (vertical)	8° (FWHM)

Components

1. Device head with optics and bird spike
2. Housing cover for socket with spring terminal block
3. Indicator LED, light sensor
4. Second cable gland M20 or blanking plug
5. Device foot with integrated socket and third cable gland M20 or blanking plug on the bottom side
6. Cable gland M20
7. Earthing connection

Note: All housing components including the cable glands satisfy the IP67 degree of protection requirements according to IEC 60529. During connection and assembly, ensure that no moisture or dirt penetrates into the open socket.

	Size	For cable diameter	Key width
EMC Cable Gland	M20 x 1.5	7.5 – 14.0 mm	24 mm

Electrical Connection

Electrical connection	Spring terminal block, max. 2.5 mm²
Operating voltage V_{IN}	19 to 36 V DC
Power consumption (V_{IN} = 24 V DC – max. intensity)	max. 2 W

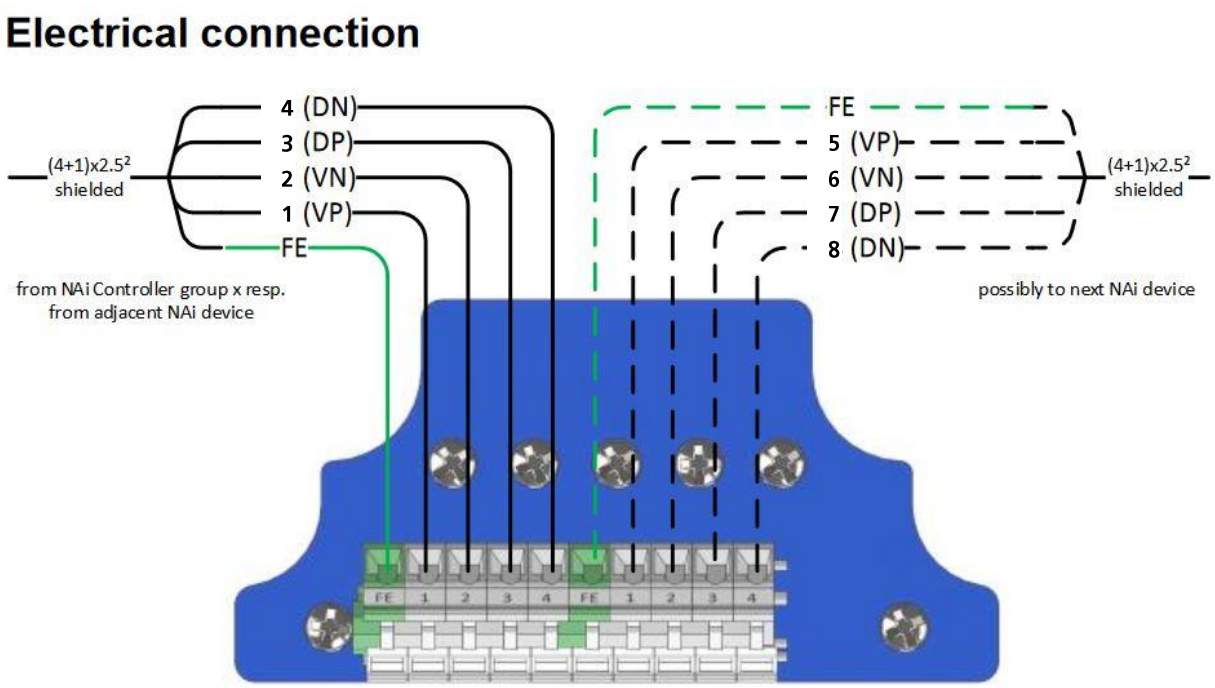

1	VPI	Power supply input (Positive)
2	VN	Power supply input (Negative)
3	DP	NAi data (Positive)
4	DN	NAi data (Negative)
5	VPO	Power supply output (Positive – to next device)
6	VN’	Power supply output (Negative – to next device)
7	DP’	NAi data (Positive – to next device)
8	DN’	NAi data (Negative – to next device)

Environmental Conditions

Regulations	IEC 60945, device type ‘exposed’
Ambient temperature (operation)	-40 °C to 55 °C
Ambient temperature (storage / transport)	-40 °C to 70 °C
Humidity (operation / storage / transport)	Max. 95 % acc. To IEC 60945
Atmospheric pressure (operation / storage / transport)	80 kPa to 108 kPa
Degree of protection (acc. to IEC 60529)	IP67

Electrical Safety and Health

Protection class	Class III
Overvoltage protection	Class III
Pollution degree	3

Reliability

MTBF Electronics	2 130 000 h
Minimum LED lifetime	100 000 h

Mechanical Requirements

Vibration testing sinusoidal vibrations	acc. to IEC 60945

Compliance

Electromagnetic Compatibility	EN 60945:2002, category "exposed" EN 61000-6-2:2005
Environmental	EN 60945:2002, category "exposed" IEC 61892-1:2019 EN 60598-1:2015 + A1:2008
Product safety	EN 60598-1:2015 + A1:2008
Mechanical	EN 60945:2002, category "exposed" EN 60598-1:2015 + A1:2008 EN 61892-3:2019

Ordering Information

Item Number	Product ID	Details
30 40 15 00	LED-160-NAI	-