L550 Red & dual White/Red D4

Medium intensity LED obstacle light

Obstacle light for day and night time marking of structures that present a hazard to aviation. White flashing in day and white flashing or Red flashing / steady in night mode. Incorporates the benefits of advanced LED, optical and system control technologies to meet the most demanding applications.

KEY FEATURES

- Five year warranty
- Housing based on 30 years of experience offshore product design experience
- Lightweight and easy to install
- Extremely low wind factor
- Integrated design with built-in photocell and monitoring – no additional power supply enclosures required
- No maintenance required over service life
- Orga optical design produces highly accurate and uniform narrow light beam
- Optional integrated GPS based flash synchronisation between lights. UTC 0.0.0
- Extremely low power consumption
- 15 year field proven power supply technology
- Long life power supply to match LED life, does not use electrolytic capacitors
- Made in the Netherlands

ELECTRICAL CHARACTERISTICS

- Operating voltage: 48 Vdc; 40-64 Vdc
- Power consumption: see table
- Overvoltage protection: Class III according to IEC61643-1

STANDARDS / CERTIFICATION

- Certified to ICAO Annex 14 Volume 1, Sixth Edition, July 2013, Chapter 6, Medium Intensity Type A / Type B / Type C obstacle light
- Complies with the specific requirements for obstruction lights described in UK CAA CAP 393 article 220 (10 January 2015) and Policy statement of November 2012 concerning lighting of wind turbines in UK territorial waters
- Complies with UK MOD requirements for Infra-Red light for marking of wind turbines
- Certified to AVV (German "General Administrative Regulation for the Marking and Lighting of Obstacles to Air Navigation") "Feuer W, rot" ES
- Certification pending to United States Federal Aviation Administration AC150/5345-43J, March 2019, including Engineering Brief 67D, Medium Intensity Type L-864 obstacle light
- Certified to French: Arrêté du 23 avril 2018 relatif à la réalisation du balisage des obstacles à la navigation aérienne.
- Various national approvals available upon request

PERFORMANCE CHARACTERISTICS

- Horizontal beam pattern: 360°
- Flashing: see table
- Effective intensity: see table
- Vertical beam pattern: 3° minimum

PHYSICAL CHARACTERISTICS

- Dimensions: L x W x H: see drawing
- Weight: 12 kg
- Design degree of protection: IP65
- Operating temperature range: -40 °C/+55 °C
- Shipping information: 550 x 550 x400 mm; approx. 16 kg
- Supplied with pre-mounted Orga cable for easy installation and high reliability ready for use
- Cable bending radius static: 7x cable diameter
- Outer cable diameter: Ø12.5 +/- 0.5 mm
- Cable weight: 260 g/m
- Level indicators for correct mounting

SYSTEM DESIGN, CONTROL AND MONITORING

- Use as a stand-alone light, or in a multiple light system with an Orga CIP controller
- Optional Orga CIP controller facilities provides control interfaces for:
  - "smart switch" aircraft detection input
  - Visibility condition variable intensity input
  - Remote photocell control input/override
  - Visibility condition variable intensity input; intensity steps 30% and 10%

All values mentioned in this document are typical values.
Document can be subject to modifications, without prior notice.
Datasheet last modified on July 9, 2019.

info@orga.nl
T +31 (0)10 208 55 55
F +31 (0)10 437 8445

P.O. Box 3046
3101 EA SCHIEDAM
The Netherlands

Orga BV
Strickledeweg 13
3125AT Schiedam
The Netherlands

L550 Red & dual White/Red D4

Medium intensity LED obstacle light

Product	Additional information						
Type	Light performance			Power consumption @ 20 °C			Standard
	Day	Twi	Night	Day	Twi	Night	
L550-63B-IR-D4-G	–	–	2000 cd 20 fpm Red and IR	2 W	2 W	14 W	ICAO
L550-63B-D4-G	–	–	2000 cd 20 fpm Red	2 W	2 W	17 W	ICAO
L550-63A/63B-IR-D4-G	20.000 cd 20 fpm White	20.000 cd 20 fpm White	2000 cd 20 fpm Red and IR	23 W	23 W	17 W	ICAO
L550-63A/63B-D4-G	20.000 cd 20 fpm White	20.000 cd 20 fpm White	2000 cd 20 fpm Red and IR	20 W	20 W	17 W	ICAO
L550-63A/63B-40/40-D4-G	20.000 cd 40 fpm White	20.000 cd 40 fpm White	2000 cd 40 fpm Red	41 W	41 W	19 W	ICAO
L550-63A/63B-40/30-D4-G	20.000 cd 40 fpm White	20.000 cd 40 fpm White	2000 cd 30 fpm Red	40 W	40 W	19 W	ICAO
L550-63A-D4-G	20.000 cd 20 fpm White	20.000 cd 20 fpm White	2000 cd 20 fpm White	25W	25W	13W	ICAO
L550-63C-IR-D4	–	–	2.000cd steady Red and IR	2 W	2 W	27 W	ICAO
L550-63A/63C-D4-G	20.000 cd 20 fpm White	20.000 cd 20 fpm White	2.000 cd steady Red	23 W	23 W	26 W	ICAO
L550-63A/63C-IR-D4-G	20.000 cd 20 fpm White	20.000 cd 20 fpm White	2.000 cd steady Red and IR	23 W	23 W	27 W	ICAO
L550-63A/63C-40/S-IR-D4-G	20.000 cd 40 fpm White	20.000 cd 40 fpm White	2.000 cd steady Red and IR	41 W	41 W	27 W	ICAO
L550-63A/63C-40/S-D4-G	20.000 cd 40 fpm White	20.000 cd 40 fpm White	2.000 cd steady Red	40 W	40 W	26 W	ICAO

All values mentioned in this document are typical values.
Document can be subject to modifications, without prior notice.
Datasheet last modified on July 9, 2019.

info@orga.nl
T +31 (0)10 208 55 55
F +31 (0)10 437 8445

P.O. Box 3046
3101 EA SCHIEDAM
The Netherlands

Orga BV
Strickledeweg 13
3125AT Schiedam
The Netherlands

L550 Red & dual White/Red D4

Medium intensity LED obstacle light

Product	Additional information						
Type	Light performance			Power consumption @ 20 °C			Standard
	Day	Twi	Night	Day	Twi	Night	
L550-3E5-W-IRM-D4-G	–	–	2.000 cd “morse W” and IR	2 W	2 W	26 W	CAA and MOD
L550-3E5-W-IRMS-D4-G	–	–	2.000 cd “morse W” and IR	2 W	2 W	26 W	CAA and MOD
L550-3E5-W-D4-G	–	–	2.000 cd “morse W”	2 W	2 W	15 W	CAA
L550-IRM-D4-G	–	–	60 fpm IR	6 W	6 W	9 W	MOD
L550-GFW-ES-D4-G	–	–	“Feuer W” Red	2 W	2 W	7 W	AVV
L550-GFW-ES-IR-D4-G	–	–	“Feuer W” Red and IR	2 W	2 W	8 W	AVV
L550-63A/FR1-30/30-D4-G	20.000 cd 20 fpm White	20.000 cd 20 fpm White	2000 cd 30 fpm Red	32 W	32 W	14 W	STAC
L550-63A/FR2-30/30-D4-G	20.000 cd 20 fpm White	20.000 cd 20 fpm White	200 cd 30 fpm Red	32 W	32 W	6 W	STAC
L550-FR2-30-D4-G	–	–	200 cd 30 fpm Red	2 W	2 W	6 W	STAC
L550-63A/63C-30/S-D4-G	20.000 cd 20 fpm White	20.000 cd 20 fpm White	2.000 cd steady Red	32 W	32 W	25 W	STAC
L550-63C-D4	–	–	2.000 cd steady Red	2 W	2 W	25 W	ICAO/STAC
L550-864-30-IR-D4-G	–	2000 cd 30 fpm Red and IR	2000 cd 30 fpm Red and IR	2 W	18 W	18 W	FAA

All values mentioned in this document are typical values.
Document can be subject to modifications, without prior notice.
Datasheet last modified on July 9, 2019.

info@orga.nl
T +31 (0)10 208 55 55
F +31 (0)10 437 8445

P.O. Box 3046
3101 EA SCHIEDAM
The Netherlands

Orga BV
Strickledeweg 13
3125AT Schiedam
The Netherlands

L550 Red & dual White/Red D4

Medium intensity LED obstacle light

LEFT VIEW

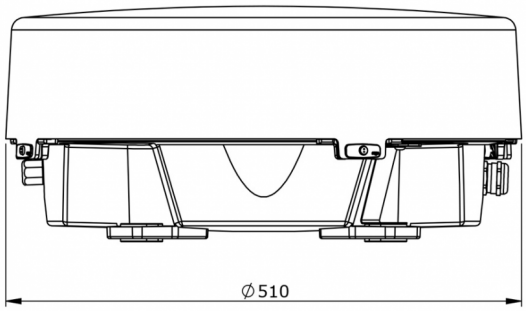

FRONT VIEW

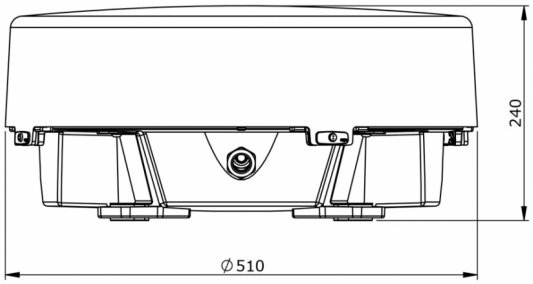

BOTTOM VIEW

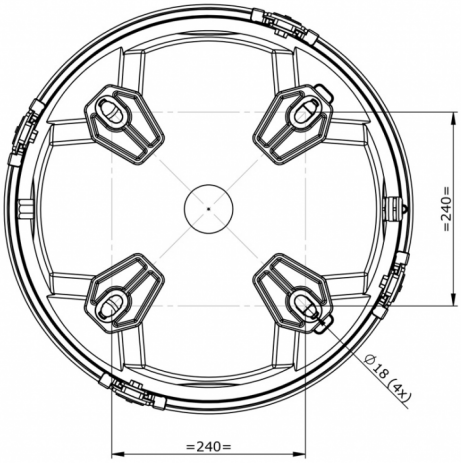

All values mentioned in this document are typical values.
Document can be subject to modifications, without prior notice.
Datasheet last modified on July 9, 2019.

Orga BV
info@orga.nl
T +31 (0)10 208 55 55
F +31 (0)10 437 8445
P.O. Box 3046
3101 EA SCHIEDAM
The Netherlands
Strickledeweg 13
3125AT Schiedam
The Netherlands